# Heavy duty clamp

706



## Product features

- material: premium flex plus carbon steel
- entirely hardened and tempered
- wooden handle, lacquered

## Advantages

- integrated brake prevents uncontrolled sliding
- maximum clamping force up to 6000N
- sliding profile serrated
- swiveling cup

## Usage

- for use in carpentry, welding and assebling

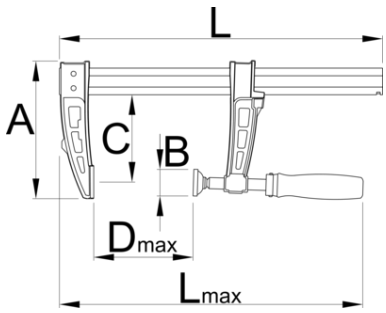

| | | D | L | L | A | C | B | |
|---|---|---|---|---|---|---|---|---|
| 626283 | 200 | 200 | 323 | 465 | 181 | 136 | 34 | 1750 |
| 626284 | 300 | 300 | 423 | 565 | 181 | 136 | 34 | 1870 |
| 626285 | 400 | 400 | 523 | 665 | 181 | 136 | 34 | 2090 |
| 626286 | 500 | 500 | 623 | 765 | 181 | 136 | 34 | 2310 |
| 626287 | 600 | 600 | 723 | 865 | 181 | 136 | 34 | 2530 |
| 626288 | 1000 | 1000 | 1123 | 1265 | 181 | 136 | 34 | 3410 |

* Images of products are symbolic. All dimensions are in mm, and weight is in grams. All listed dimensions may vary in tolerance.

## Usage (pictures)



Sliding jaw with multiple positioning choices.



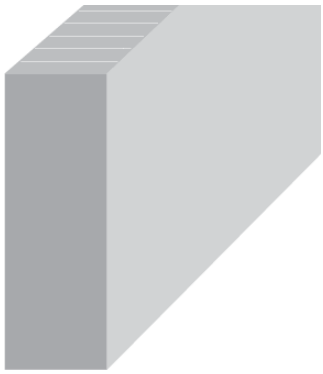

High resistance rectangular steel profiled rail, calibrated and serrated. Surface finish: jaws lacquered, rail zinc plated.



Screw with trapezoidal thread: "Less efforts-more clamping force".



Swivel foot













