Heavy duty clamp

706



Product features

- material: premium flex plus carbon steel
- entirely hardened and tempered
- wooden handle, lacquered

Advantages

- integrated brake prevents uncontrolled sliding
- maximum clamping force up to 6000N
- sliding profile serrated
- swiveling cup

Usage

- for use in carpentry, welding and assebling

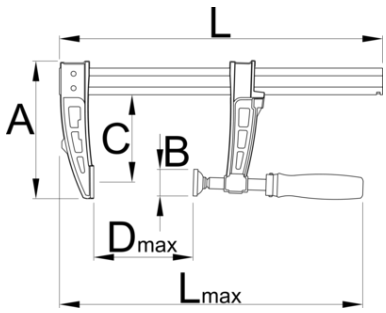

		D	L	L	A	C	B	
626283	200	200	323	465	181	136	34	1750
626284	300	300	423	565	181	136	34	1870
626285	400	400	523	665	181	136	34	2090
626286	500	500	623	765	181	136	34	2310
626287	600	600	723	865	181	136	34	2530
626288	1000	1000	1123	1265	181	136	34	3410

* Images of products are symbolic. All dimensions are in mm, and weight is in grams. All listed dimensions may vary in tolerance.

Usage (pictures)



Sliding jaw with multiple positioning choices.



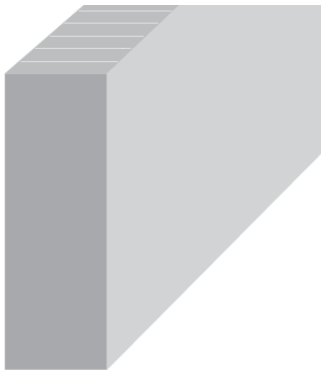

High resistance rectangular steel profiled rail, calibrated and serrated. Surface finish: jaws lacquered, rail zinc plated.



Screw with trapezoidal thread: "Less efforts-more clamping force".



Swivel foot













