Dispozitiv de taiat teava

360/6A



Caracteristicile produsului

- Designed to be an easy to use and effective way of cutting tubes. Simply place the cutter and engage the cutting wheel at your desired position, rotate tool around the tube while adjusting the cutting wheel using the ergonomic knob.
- schimbare instantanee a roții
- ergonomic knob
- 4 rollers for a better fastening of the tube and smooth operation
- spare cutting wheel in handle
- possible individual use of burr NOGA removal tool
- steel threaded insert for longer life span

Utilizare

- pentru taierea tuburilor de cupru, aluminiu, inox si otel cu grosime maxima pana la 2mm

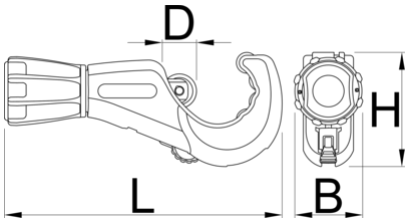

	mm		B	D	H	L	
626187	3 - 35	1/8" - 1.3/8"	41.4	19.8	65.8	160.6	340

* Imaginea produsului este simbolica.Toate dimensiunile sunt exprimate în mm,greutatea în grame.

0 (pictures)



4 rollers for a better fastening of the tube and smooth operation



possible individual use of burr NOGA removal tool

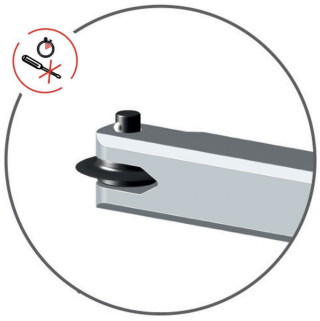

schimbare instantanee a roții

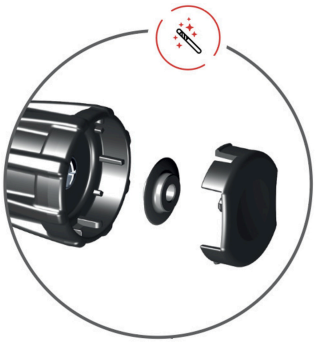

spare cutting wheel in handle



steel threaded insert for longer life span

Piese de schimb



Role de taiere

Related products



Dispozitiv de taiat teava



Dispozitiv de taiat teava



Dispozitiv de taiat teava