Tube cutter

360/6A

Product features

- Designed to be an easy to use and effective way of cutting tubes. Simply place the cutter and engage the cutting wheel at your desired position, rotate tool around the tube while adjusting the cutting wheel using the ergonomic knob.
- instant wheel change
- ergonomic knob
- 4 rollers for a better fastening of the tube and smooth operation
- spare cutting wheel in handle
- possible individual use of burr NOGA removal tool
- steel threaded insert for longer life span

Usage:

- for cutting cooper, aluminium, inox and steel tube of maximum thickness till 2mm

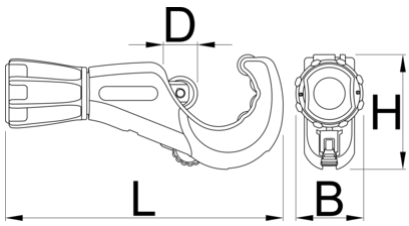

			B	D	H	L	

	mm	"	B	D	H	L	
626187	3 - 35	1/8" - 1.3/8"	41.4	19.8	65.8	160.6	340

* Images of products are symbolic. All dimensions are in mm, and weight in grams. All listed dimensions may vary in tolerance.

Usage (pictures)

4 rollers for a better fastening of the tube and smooth operation

possible individual use of burr NOGA removal tool

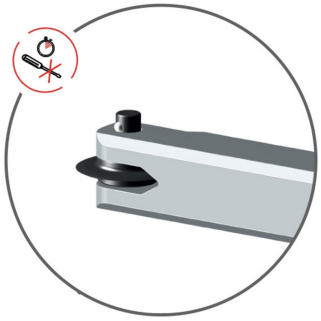

instant wheel change

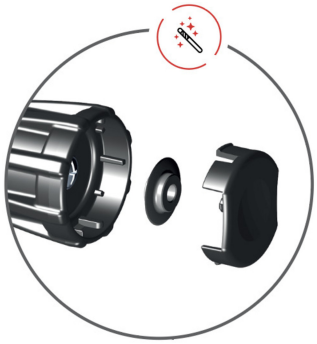

spare cutting wheel in handle

steel threaded insert for longer life span

Spare parts

Cutting wheel

Related products

Tube cutter

Tube cutter

Tube cutter