Tool tray with foldable arm for 1693EL

1693EL.5



Profiles

Product features

Foldable tool tray mounts to the Unior's electric repair stand column and provides optimal placement of tool tray. Tray will be right where you need it, providing perfect placement for the tools and small parts, thus increasing work productivity as you will not need to rotate to the workbench. Tool tray can rotate for 90 degrees left or right. Foldable arm is 500 mm long and allows to pull the tool tray over the bike if needed or move it out of work area when not in use. Tool tray is made of thin metal plate and SOS foam tray, with room to hang different tools and open compartments for storage.

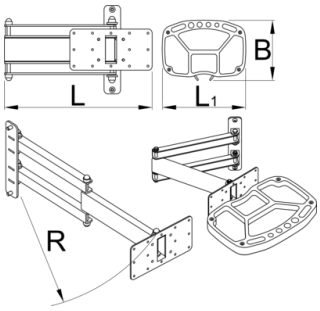

	L	L1	B	R	
629028	360.5	325	234	520	4130

* Images of products are symbolic. All dimensions are in mm, and weight is in grams. All listed dimensions may vary in tolerance.

Usage (pictures)

