Laptop holder with foldable arm for 1693EL

1693EL.2



Profiles

Product features

Foldable laptop holder mounts to the Union's electric repair stand column and provides optimal placement for laptop. The setup will make work more comfortable and productive as the computer will be right where you need it and you'll not have to turn around to the workbench to access it. Tray is large enough to support laptops up to the size 15″ and can rotate for 90 degrees left or right. Foldable arm is 500 mm long and allows to pull the laptop over the bike, closer to you, or move it out of work area when not in use.

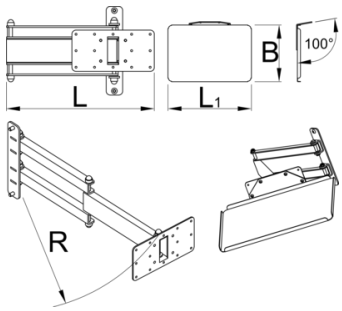

	L	L1	B	R	
629025	360.5	400	270	520	5610

* Images of products are symbolic. All dimensions are in mm, and weight is in grams. All listed dimensions may vary in tolerance.

Usage (pictures)




