Udarni odvijač 1/2"

1563



Profili



Atributi proizvoda

- 8.000 o/min u slobodnom hodu
- max. obrtni momenat 745 Nm
- preporučeni pritisak vazduha: 6, 2 bara

- potrošnja vazduha 164 l / min
- priključak za zrak: 1/4"
- nivo buke 104dB (A)
- max bolt size M20

Prednosti:

- kompozitno kućište motora
- ručica izduvnih gasova (prigušivač)
- jednu ruku napred / nazad
- kompaktan i moćan
- Udarni mehanizam JUMBO čekić

Upotreba:

- automobilska industrija
- avionska industrija
- poljoprivredna mehanizacija
- teška industrija
- veći građevinski strojevi
- brodogradnja
- individualna montaža

Važno!

- UVIJEK koristite Uniorove IMPACT nasadne ključeve i pribor

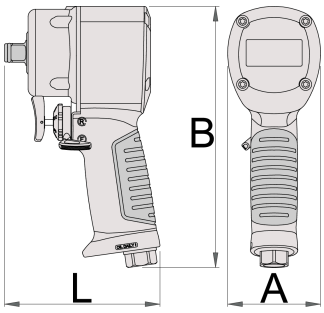

		L	A	B	Nm	
627568	1/2"	105,4	63	177	745	1329

* Slike proizvoda su simbolične. Sve dimenzije su u mm, masa je u g.

Upotreba (pictures)



Photo (pictures)



Accessories

 Spojnica muška

 Spojnica muška

 Spojnica ženska

 Spojnica ženska

 Pripremna grupa 3/8"

 Pripremna grupa 1/2"

 Crijevo spiralno za zrak

Safety tips

● The pressure in the tool during the operation has to be at least 6.2 bar for the tool to work properly.

● Regularly clean and dry the air filters and inlet air supply.

● Always use clean and dry air with the correct mixture of oil, for maximum tool life.

● Check the joints and ensure that the tubes and other equipment are not damaged before use.

● All tools should be gently oiled prior to being stored.

● Always store pneumatic tools in dry places away from water.

● Always use original spare parts.

● Repairs can be performed only by authorised staff people authorised by Unior d.d.

● Always disconnect tools not in use from the air supply.