Pro Shop Clamp

1693.1Q



Προφίλ

Χαρακτηριστικά προϊόντος

- Pro Shop Clamp is Unior's high-end offer for bike shops. It features advanced quick release system that enable quick and efficient work on any bicycle.
- Quick release system enables the mechanic to press the jaws by hand, at which point clamp already grips the seat post of a frame with sufficient force to hold the bicycle in place. Rotate the handle and additional tension is applied to the jaws to ensure firm grip.
- Clamp can grip tubes of any shape, with diameter of minimum Ø22mm to maximum Ø60mm.
- Pro Shop Clamp has a quick release button, which is used to release the jaws after initial tension release with the rotating handle.
- Height of the jaws is 70mm, so it works with smaller sizes of seat posts as well as with dropper posts.
- The clamp is compatible with all of Unior's repair stands.

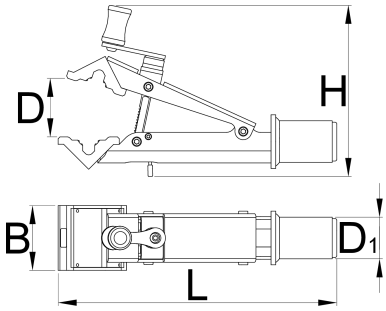

	D↓	D↑	B	H	L	D1	
627095	22	60	70	185	300	45	1730

* Οι εικόνες των προϊόντων είναι συμβολικές. Ολες οι διαστάσεις είναι σε mm,το βάρος είναι σε γραμμάρια. Όλες οι αναφερόμενες διαστάσεις μπορεί να διαφέρουν σε ανοχές.

Χρήση (εικόνες)







Ανταλλακτικά


Αλλασσόμενα ελαστικά καλύμματα σιαγόνων για το 1693.1, 2 τεμάχια/σετ


Set of spare parts for 1693.1Q