Data Sheet
uniortools.com

Y hex wrench

1781/2HX-US

Profiles

Product features

- The plastic-injected handle offers a comfortable and compact grip, which enables efficient working while the high-quality material enables long-term use of the tool.

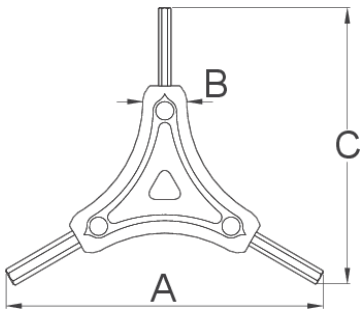

				A	B	C	
624908	2	2,5	3	122	16	106	36
624909	4	5	6	122	16	106	65

* Images of products are symbolic. All dimensions are in mm, and weight in grams. All listed dimensions may vary in tolerance.

Usage (pictures)