Ključ za lančanik

1670/2BI-US



Profili

Atributi proizvoda

- materijal: Premium Flex Plus ugljični čelik, ojačan i poboljšan
- površina kromirana ISO 1456:2009
- ergonomska, robusna, dvokomponentna drška
- Compatible with 10/11/12t small-cog cassettes
- Ridges on the outside of the pins provide a secure grip on the cassett.
- Access hole allows for a cassette lockring tool to fit.

Kako upotrijebiti alat:

- Modern replacement of the traditional chain whip
- Pins on the tool engage with the smallest sprocket on the cassette and hold it in place, while the opening in the middle allows for easy access to the cassette lockring.
- Version for 11- & 12-tooth sprockets has longer pins on the “12t” side. This makes it fully compatible with cassettes where two smallest sprockets have 10 and 12 teeth. For removal of the sprocket, where the smallest sprocket has 10t, the tool reaches over it and engages with the next 12t sprocket.

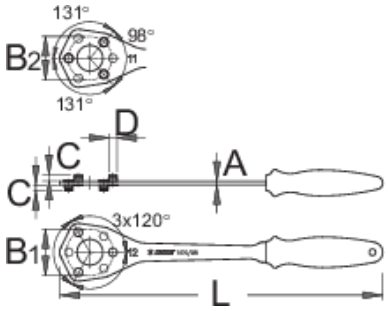

		L	D	A	C	B1	B2	
624931	11/12	350	8,6	4	6,4	49,8	46	238

* Slike proizvoda su simbolične. Sve dimenzije su u mm, masa je u g.