Slagmoerdopsleutel 3/4"

232/4 6p



Profielen

Standaard

ISO 2725-2

Product attributen

- materiaal: premium flex chroom vanadium staal
- drop forged, entirely hardened and tempered
- surface finish: phosphated to standard ISO 9717
- made according to standard ISO 2725-2
- made according to standard DIN 3129

Voordelen:

- 6-point profile ensures optimal torque transfer while reducing the risk of rounding fasteners.

- Phosphate finish offers enhanced wear and corrosion resistance.
- Manufactured in accordance with ISO 2725-2 for dependable professional performance.

Gebruik:

- Automotive and commercial vehicle maintenance.
- Use with pneumatic and cordless impact wrenches.
- Tightening and loosening fasteners on long threaded studs.
- Professional workshops, industrial maintenance, and repair operations

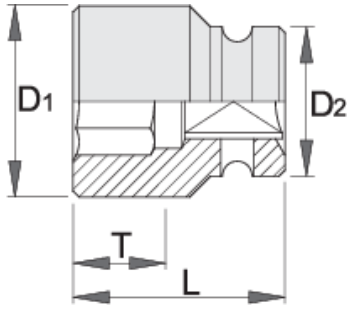

	mm	D1	D2	L	T	
603980	17	31	44	50	12	374
603981	19	33	44	50	13	387
603982	21	35	44	50	15	381
603983	22	37	44	50	15	400
603984	24	39	44	50	16	393
603985	27	43	44	54	19	410
609403	28	44	44	54	19	403
603986	30	47	44	54	21	438
603987	32	51	44	54	22	481
603988	33	51	44	54	22	497
603989	36	54	44	54	23	508
603990	41	60	44	58	27	631
603991	46	67	44	63	30	813

* Afbeeldingen van producten zijn symbolisch. Alle afmetingen zijn in mm en gewicht in gram. Alle vermelde afmetingen kunnen variëren in tolerantie.

Gerelateerde producten

 Slagmoerdopsleutel 3/4", lang

Veiligheid (Afbeeldingen)

