# Maschinen-Steckschlüssel für Schlagschrauber 3/4 Zoll

232/4 6p




## Profile

## Standards

ISO 2725-2

## Produkteigenschaften

- Material: Premium Flex Chrom-Vanadium-Stahl
- geschmiedet, gehärtet und vergütet
- Oberfläche: phosphatiert nach Standard ISO 9717
- gefertigt laut Standard ISO 2725-2
- nach Norm DIN 3129

**Vorteile:**

- 6-point profile ensures optimal torque transfer while reducing the risk of rounding fasteners.
- Phosphate finish offers enhanced wear and corrosion resistance.
- Manufactured in accordance with ISO 2725-2 for dependable professional performance.

## Verwendung:

- Automotive and commercial vehicle maintenance.
- Use with pneumatic and cordless impact wrenches.
- Tightening and loosening fasteners on long threaded studs.
- Professional workshops, industrial maintenance, and repair operations

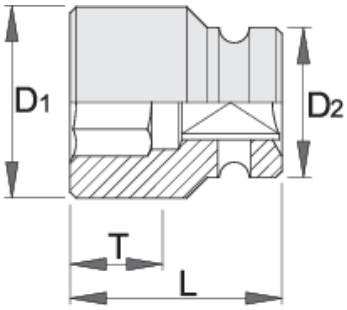


| | mm | D1 | D2 | L | T | |
|---|---|---|---|---|---|---|
| 603980 | 17 | 31 | 44 | 50 | 12 | 374 |
| 603981 | 19 | 33 | 44 | 50 | 13 | 387 |
| 603982 | 21 | 35 | 44 | 50 | 15 | 381 |
| 603983 | 22 | 37 | 44 | 50 | 15 | 400 |
| 603984 | 24 | 39 | 44 | 50 | 16 | 393 |
| 603985 | 27 | 43 | 44 | 54 | 19 | 410 |
| 609403 | 28 | 44 | 44 | 54 | 19 | 403 |
| 603986 | 30 | 47 | 44 | 54 | 21 | 438 |
| 603987 | 32 | 51 | 44 | 54 | 22 | 481 |
| 603988 | 33 | 51 | 44 | 54 | 22 | 497 |
| 603989 | 36 | 54 | 44 | 54 | 23 | 508 |
| 603990 | 41 | 60 | 44 | 58 | 27 | 631 |
| 603991 | 46 | 67 | 44 | 63 | 30 | 813 |

* Bilder von Produkten sind Symbolfotos. Abmessungen sind in mm, Gewichte in Gramm.

# Verwandte Produkte

 Maschinen-Steckschlüssel für Schlagschrauber 3/4 Zoll, lange Ausführung

## Sicherheit (Bilder)

