Maschinen-Steckschlüssel für Schlagschrauber 1/2 Zoll

231/4 6p



Profile

Standards

ISO 2725-2

Produkteigenschaften

- Material: Premium Flex Chrom-Vanadium-Stahl
- geschmiedet, gehärtet und vergütet
- Oberfläche: phosphatiert nach Standard ISO 9717
- gefertigt laut Standard ISO 2725-2

Vorteile:

- 6-point profile ensures optimal torque transfer while reducing the risk of rounding fasteners.
- Phosphate finish offers enhanced wear and corrosion resistance.
- Manufactured in accordance with ISO 2725-2 for dependable professional performance.

Verwendung:

- Automotive and commercial vehicle maintenance.
- Use with pneumatic and cordless impact wrenches.
- Tightening and loosening fasteners on long threaded studs.
- Professional workshops, industrial maintenance, and repair operations

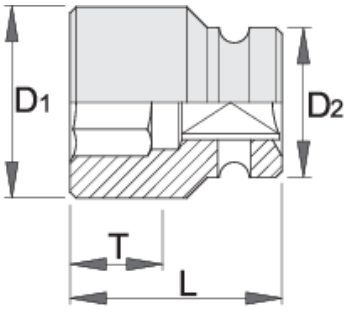

	mm	D1	D2	L	T	
603962	10	17.5	25	38	12	94
603963	11	18.7	25	38	12	95
603964	12	20	25	38	12	95
603965	13	21	25	38	12	96
603966	14	22.5	25	38	12	95
603967	15	23.7	30	38	12	140
603968	16	25	30	38	12	143
603969	17	26	30	38	13	140
609399	18	27.5	30	38	13	135
603970	19	28.7	30	38	13	132
603971	21	30	30	38	13	139
603972	22	32	30	38	13	133
603973	23	32	30	38	13	183
603974	24	35	30	45	20	179
603975	27	38.7	30	50	24	235
609400	28	40	30	50	24	255

	mm	D1	D2	L	T	
603976	30	42	30	50	24	259

* Bilder von Produkten sind Symbolfotos. Abmessungen sind in mm, Gewichte in Gramm.

Sicherheit (Bilder)

