Spoke tension meter 2.0

1752/6



Vlastnosti produktu

New in Version 2.0:

- Bearing contact points – Now equipped with bearings at the spoke contact areas, which greatly improve measurement accuracy and repeatability
- Black surface finish – The updated black body makes the scale easier to read
- Quick access QR code – Instantly links you to the **Unior Wheel Tension App (https://spoketension.uniortools.com/)**, which includes conversion tables to translate measurements into kilogram-force, tool and app usage instructions, an interactive wheel tension balancing chart, and the option to print a wheel tension sheet
- Spoke thickness gauge – A built-in gauge allows for quick and easy spoke diameter identification
- Unique Calibration System – Each tool includes a dedicated calibration stick—the exact one used during its factory calibration. This allows for quick and precise recalibration at any time. Simply press the handle, insert the calibration stick, and adjust the tool's spring until the reading matches the calibration value marked on the stick. The process takes just seconds.

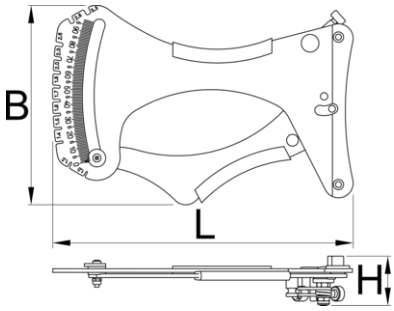

	L	B	H	
629939	205	135	37	682

* Obrázky produktů jsou symbolické. Všechny rozměry jsou v mm a hmotnost v gramech. Všechny uvedené rozměry se mohou lišit v toleranci.

Používání (obrázky)





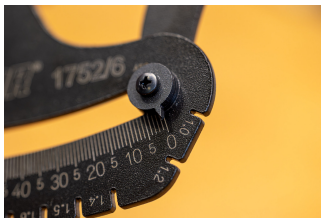




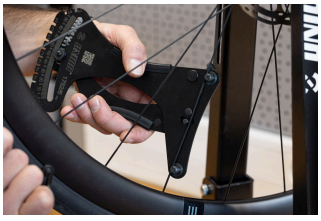



náhradní části



Pružina pro měřič napětí paprsků